LEGEND

SS	SEWER LINE
Ⓢ	SEWER MANHOLE
W	WATER LINE
G	GAS LINE
	UTILITY POLE
GV	GAS VALVE
E	OVERHEAD ELECTRIC SERVICE
WV	WATER VALVE
□	CATCH BASIN
	FENCE
205	CONTOUR LINE (MJR)
195	CONTOUR LINE (MNR)
X	SPOT GRADE
Ⓓ	DRAIN MANHOLE
	HYDRANT
	TREE

REFER TO ARCHITECTURAL PLANS FOR ALL ZONING RELATED INFORMATION

ALL SURFACE WATER RUNOFF SHALL BE DIRECTED AWAY FROM BUILDING FOUNDATION AND AWAY FROM NEIGHBORING PROPERTY

PROPOSED FIRST FLOOR ELEVATION TO BE VERIFIED BY ARCHITECT PRIOR TO ANY CONCRETE BEING POURED.

DRAINAGE AREA SUMMARY

EXISTING ROOF AREA (HOUSE/GARAGE) = 1,439.0 S.F.
EXISTING PAVED AREA (DRIVEWAY) = 3,961.3 S.F.
EXISTING IMPERVIOUS (WALKWAY/PORCH/STEPS) = 285.3 S.F.
EXISTING LANDSCAPE AREA = 5,318.4 S.F.

PROPOSED ROOF AREA = 3,406.1 S.F.
PROPOSED PAVED AREA = 1,536.4 S.F.
PROPOSED IMPERVIOUS (PORCH/STEPS/RET. WALLS) = 647.9 S.F.
PROPOSED PERMEABLE PAVERS (DRIVEWAY/PARKING/PATIOS/WALKWAYS)=2,171.9 S.F.
PROPOSED LANDSCAPE AREA = 3,241.7 S.F.

TOTAL EXISTING IMPERVIOUS AREA = 5,685.6 S.F.
TOTAL PROPOSED IMPERVIOUS AREA = 5,590.4 S.F.

TOTAL DECREASE IN IMPERVIOUS AREA = 95.2 S.F.

* PER TITLE V, SEWER FLOW RESIDENTIAL (G.P.D)
EXISTING = (5 BEDROOMS x 110 G.P.D.) =550 G.P.D
PROPOSED = (15 BEDROOMS x 110 G.P.D.) =1,650 G.P.D

THEREFORE, PROPOSED INCREASED FLOW = 1,100 G.P.D
MITIGATION FEE = $6.89 X 1,100 G.P.D = $7,579

SEE THE ATTACHED STORMWATER REPORT FOR DRAINAGE SYSTEM CALCULATIONS.

AREA LEGEND

- PROPOSED ROOF AREA
- PROPOSED PAVED AREA
- PROPOSED LANDSCAPED AREA
- PROPOSED PERMEABLE PAVERS AREA

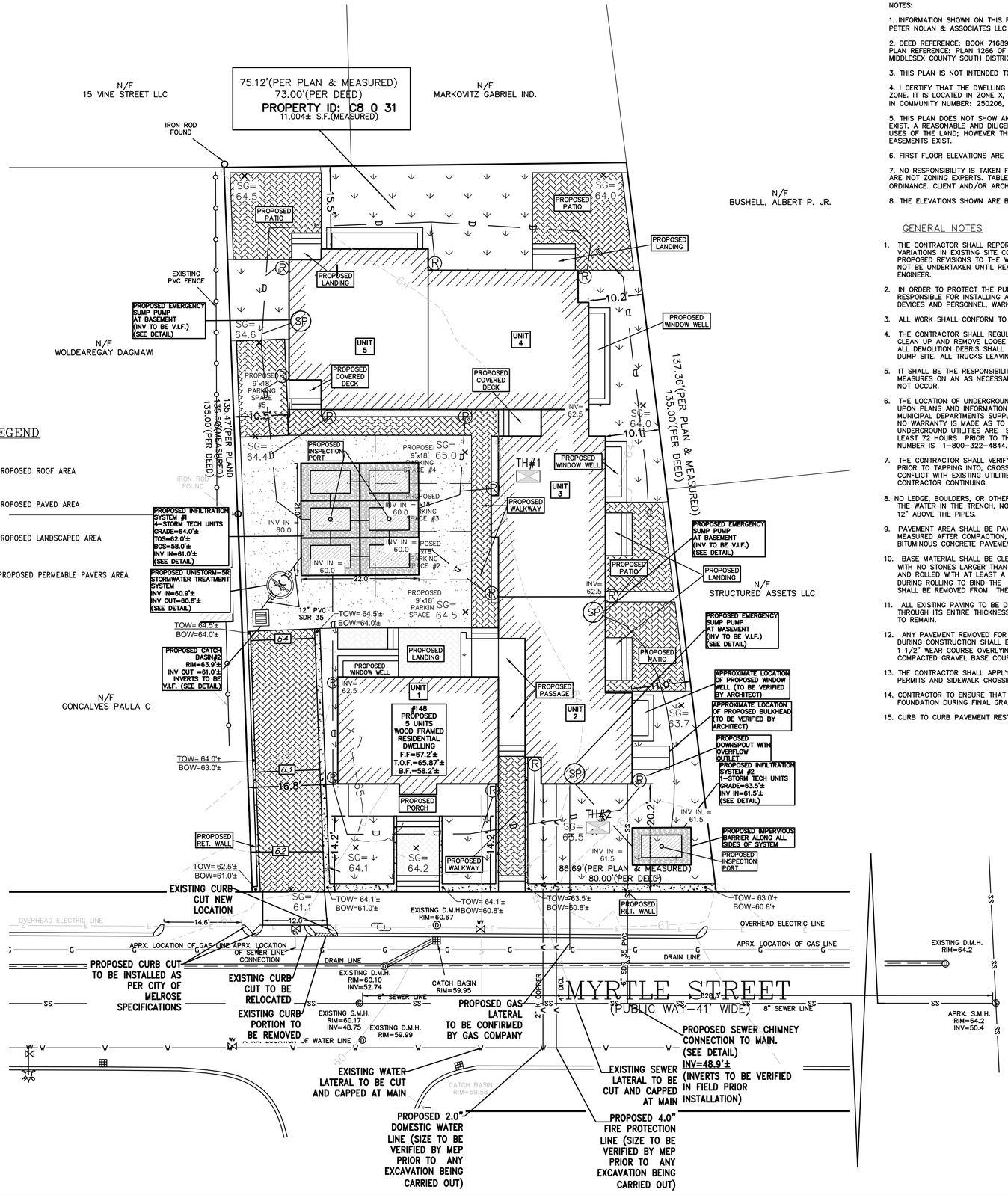

NOTES:

1. INFORMATION SHOWN ON THIS PLAN IS THE RESULT OF A FIELD SURVEY PERFORMED BY PETER NOLAN & ASSOCIATES LLC AS OF 3/19/2021.

2. DEED REFERENCE: BOOK 71689, PAGE 369
PLAN REFERENCE: PLAN 1266 OF 1971
MIDDLESEX COUNTY SOUTH DISTRICT REGISTRY OF DEEDS

3. THIS PLAN IS NOT INTENDED TO BE RECORDED.

4. I CERTIFY THAT THE DWELLING SHOWN IS NOT LOCATED WITHIN A SPECIAL FLOOD HAZARD ZONE, IT IS LOCATED IN ZONE X, ON FLOOD HAZARD BOUNDARY MAP NUMBER 25017C0429E, IN COMMUNITY NUMBER: 250206, DATED 6/4/2010.

5. THIS PLAN DOES NOT SHOW ANY UNRECORDED OR UNWRITTEN EASEMENTS WHICH MAY EXIST. A REASONABLE AND DILIGENT ATTEMPT HAS BEEN MADE TO OBSERVE ANY APPARENT USES OF THE LAND; HOWEVER THIS NOT CONSTITUTE A GUARANTEE THAT NO SUCH EASEMENTS EXIST.

6. FIRST FLOOR ELEVATIONS ARE TAKEN AT THRESHOLD.

7. NO RESPONSIBILITY IS TAKEN FOR ZONING TABLE AS PETER NOLAN & ASSOCIATES LLC ARE NOT ZONING EXPERTS. TABLE IS TAKEN FROM TABLE PROVIDED BY LOCAL ZONING ORDINANCE. CLIENT AND/OR ARCHITECT TO VERIFY THE ACCURACY OF ZONING ANALYSIS.

8. THE ELEVATIONS SHOWN ARE BASED ON CITY OF MELROSE DATUM.

GENERAL NOTES

1. THE CONTRACTOR SHALL REPORT TO THE OWNER AND ENGINEER OF ANY SIGNIFICANT VARIATIONS IN EXISTING SITE CONDITIONS FROM THOSE SHOWN ON THESE PLANS. ANY PROPOSED REVISIONS TO THE WORK, IF REQUIRED BY THESE SITE CONDITIONS, SHALL NOT BE UNDERTAKEN UNTIL REVIEWED AND APPROVED BY THE OWNER AND THE ENGINEER.
2. IN ORDER TO PROTECT THE PUBLIC SAFETY DURING CONSTRUCTION, THE CONTRACTOR IS RESPONSIBLE FOR INSTALLING AND MAINTAINING AT ALL TIMES ALL NECESSARY SAFETY DEVICES AND PERSONNEL, WARNING LIGHTS, BARRICADES, AND POLICE OFFICERS.
3. ALL WORK SHALL CONFORM TO CITY OF MELROSE GENERAL CONSTRUCTION STANDARDS.
4. THE CONTRACTOR SHALL REGULARLY INSPECT THE PERIMETER OF THE PROPERTY TO CLEAN UP AND REMOVE LOOSE CONSTRUCTION DEBRIS BEFORE IT LEAVES THE SITE. ALL DEMOLITION DEBRIS SHALL BE PROMPTLY REMOVED FROM THE SITE TO A LEGAL DUMP SITE. ALL TRUCKS LEAVING THE SITE SHALL BE COVERED.
5. IT SHALL BE THE RESPONSIBILITY OF THE CONTRACTOR TO INSTITUTE EROSION CONTROL MEASURES ON AN AS NECESSARY BASIS, SUCH THAT EXCESSIVE SOIL EROSION DOES NOT OCCUR.
6. THE LOCATION OF UNDERGROUND UTILITIES AS REPRESENTED ON THESE PLANS IS BASED UPON PLANS AND INFORMATION PROVIDED BY THE RESPECTIVE UTILITY COMPANIES OR MUNICIPAL DEPARTMENTS SUPPLEMENTED BY FIELD IDENTIFICATION WHEREVER POSSIBLE. NO WARRANTY IS MADE AS TO THE ACCURACY OF THESE LOCATIONS OR THAT ALL UNDERGROUND UTILITIES ARE SHOWN. THE CONTRACTOR SHALL CONTRACT DIG SAFE AT LEAST 72 HOURS PRIOR TO THE START OF CONSTRUCTION. DIG SAFE TELEPHONE NUMBER IS 1-800-322-4844.
7. THE CONTRACTOR SHALL VERIFY THE LOCATION, SIZE AND DEPTH OF EXISTING UTILITIES PRIOR TO TAPPING INTO, CROSSING OR EXTENDING THEM. IF THE NEW WORK POSES A CONFLICT WITH EXISTING UTILITIES, THE ENGINEER SHALL BE NOTIFIED PRIOR TO THE CONTRACTOR CONTINUING.
8. NO LEDGE, BOULDERS, OR OTHER UNYIELDING MATERIALS ARE TO BE LEFT WITHIN 6" OF THE WATER IN THE TRENCH, NOR ARE THEY TO BE USED FOR BACKFILL FOR THE FIRST 12" ABOVE THE PIPES.
9. PAVEMENT AREA SHALL BE PAVED TO A THICKNESS AS SHOWN ON THE PLANS MEASURED AFTER COMPACTION, WITH A BINDER COURSE AND TOP COURSE OF CLASS I BITUMINOUS CONCRETE PAVEMENT, TYPE I-1.
10. BASE MATERIAL SHALL BE CLEAN BANK RUN GRAVEL, CONFORMING TO M.D.P.W. M1.03.1, WITH NO STONES LARGER THAN THREE (3) INCHES IN DIAMETER AND SHALL BE PLACED AND ROLLED WITH AT LEAST A TEN TON ROLLER. THE SURFACES SHALL BE WET DURING ROLLING TO BIND THE MATERIAL. ALL STONES OF 4" DIAMETER OR LARGER SHALL BE REMOVED FROM THE SUB-BASE PRIOR TO PLACING BASE MATERIAL.
11. ALL EXISTING PAVING TO BE DISTURBED SHALL BE CUT ALONG A STRAIGHT LINE THROUGH ITS ENTIRE THICKNESS. BUTT THE NEW PAVING INTO THE EXISTING PAVEMENT TO REMAIN.
12. ANY PAVEMENT REMOVED FOR UTILITY TRENCH EXCAVATION OR OTHERWISE DAMAGED DURING CONSTRUCTION SHALL BE REPLACED WITH A PAVEMENT SECTION CONSISTING OF 1 1/2" WEAR COURSE OVERLYING A 2 1/2" BINDER COURSE OVERLYING A 8" COMPACTED GRAVEL BASE COURSE.
13. THE CONTRACTOR SHALL APPLY FOR A STREET OPENING AND UTILITY CONNECTION PERMITS AND SIDEWALK CROSSING PERMIT WITH THE CITY OF MELROSE DPW.
14. CONTRACTOR TO ENSURE THAT ALL SURFACE WATER IS DIVERTED AWAY FROM BUILDING FOUNDATION DURING FINAL GRADING.
15. CURB TO CURB PAVEMENT RESTORATION MUST BE INSTALLED IN MYRTLE STREET.

PETER NOLAN & ASSOCIATES, LLC
LAND SURVEYORS/CIVIL ENGINEERING CONSULTANTS
80 JEWETT ST, (SUITE 2)
NEWTON, MA 02458
Tel:857-891-7478
617-782-1533
Fax:617-2025691

SPRUHAN ENGINEERING, P.C.
80 JEWETT ST, (SUITE 2)
NEWTON, MA 02458
Tel: 617-816-0722
Email:edmond@spruhaneng.com

COMMONWEALTH OF MASSACHUSETTS PETER J. NOLAN No. 49185 REGISTERED PROFESSIONAL LAND SURVEYOR

COMMONWEALTH OF MASSACHUSETTS EDMOND SPRUHAN CIVIL No. 33316 REGISTERED PROFESSIONAL ENGINEER

148 MYRTLE ST, MELROSE, MASSACHUSETTS.

CIVIL PLAN

REVISION BLOCK

BY	DESCRIPTION	DATE
GP	REVISED AS PER DPW COMMENTS	3/23/2022

DATE:	11/18/2021
DRAWN BY:	G.P
CHECKED BY:	E.S
APPROVED BY:	P.N

CIVIL PLAN

INFILTRATION SYSTEM #1

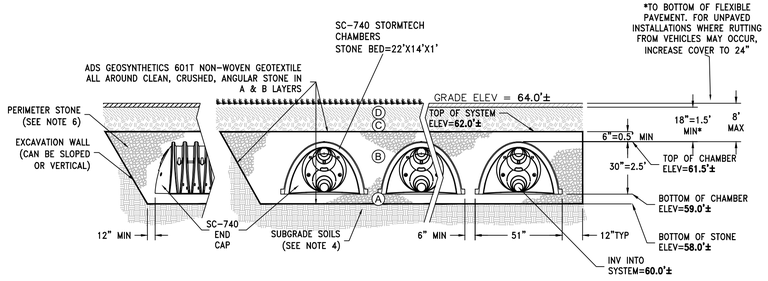

INFILTRATION SYSTEM #2

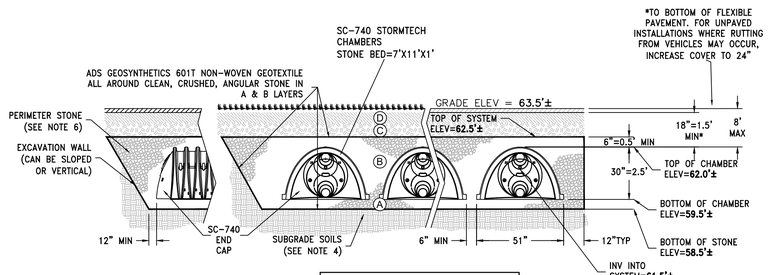

IMPERVIOUS BARRIER TO BE EXTENDED BELOW BASEMENT FLOOR.

ACCEPTABLE FILL MATERIALS: STORMTECH SC-740 CHAMBER SYSTEMS

MATERIAL LOCATION	DESCRIPTION	AASHTO MATERIAL CLASSIFICATIONS	COMPACTION / DENSITY REQUIREMENT
D	FINAL FILL: FILL MATERIAL FOR LAYER 'D' STARTS FROM THE TOP OF THE 'C' LAYER TO THE BOTTOM OF FLEXIBLE PAVEMENT OR UNPAVED FINISHED GRADE ABOVE. NOTE THAT PAVEMENT SUBBASE MAY BE PART OF THE 'D' LAYER	ANY SOIL/ROCK MATERIALS, NATIVE SOILS, OR PER ENGINEER'S PLANS. CHECK PLANS FOR PAVEMENT SUBGRADE REQUIREMENTS.	N/A	PREPARE PER SITE DESIGN ENGINEER'S PLANS. PAVED INSTALLATIONS MAY HAVE STRINGENT MATERIAL AND PREPARATION REQUIREMENTS.
C	INITIAL FILL: FILL MATERIAL FOR LAYER 'C' STARTS FROM THE TOP OF THE EMBEDMENT STONE ('B' LAYER) TO 18" (450 mm) ABOVE THE TOP OF THE CHAMBER. NOTE THAT PAVEMENT SUBBASE MAY BE A PART OF THE 'C' LAYER.	GRANULAR WELL-GRADED SOIL/AGGREGATE MIXTURES, <35% FINES OR PROCESSED AGGREGATE. MOST PAVEMENT SUBBASE MATERIALS CAN BE USED IN LIEU OF THIS LAYER.	AASHTO M145: A-1, A-2-4, A-3 OR AASHTO M43: 3, 357, 4, 467, 5, 56, 57, 6, 67, 68, 7, 78, 8, 89, 9, 10	BEGIN COMPACTIONS AFTER 12" (300 mm) OF MATERIAL OVER THE CHAMBERS IS REACHED. COMPACT ADDITIONAL LAYERS IN 6" (150 mm) MAX LIFTS TO A MIN. 95% PROCTOR DENSITY FOR WELL GRADED MATERIAL AND 95% RELATIVE DENSITY FOR PROCESSED AGGREGATE MATERIALS. ROLLER GROSS VEHICLE WEIGHT NOT TO EXCEED 12,000 lbs (53 kN). DYNAMIC FORCE NOT TO EXCEED 20,000 lbs (89 kN).
B	EMBEDMENT STONE: FILL SURROUNDING THE CHAMBERS FROM THE FOUNDATION STONE ('A' LAYER) TO THE 'C' LAYER ABOVE.	CLEAN, CRUSHED, ANGULAR STONE	AASHTO M43: 3, 357, 4, 467, 5, 56, 57	NO COMPACTION REQUIRED.
A	FOUNDATION STONE: FILL BELOW CHAMBERS FROM THE SUBGRADE UP TO THE FOOT (BOTTOM) OF THE CHAMBER.	CLEAN, CRUSHED, ANGULAR STONE	AASHTO M43: 3, 357, 4, 467, 5, 56, 57	PLATE COMPACT OR ROLL TO ACHIEVE A FLAT SURFACE.

PLEASE NOTE:

1. THE LISTED AASHTO DESIGNATIONS ARE FOR GRADATIONS ONLY. THE STONE MUST ALSO BE CLEAN, CRUSHED, ANGULAR. FOR EXAMPLE, A SPECIFICATION FOR #4 STONE WOULD STATE: "CLEAN, CRUSHED, ANGULAR NO. 4 (AASHTO M43) STONE".
2. STORMTECH COMPACTION REQUIREMENTS ARE MET FOR 'A' LOCATION MATERIALS WHEN PLACED AND COMPACTED IN 6" (150 mm) (MAX) LIFTS USING TWO FULL COVERAGES WITH A VIBRATORY COMPACTOR.
3. WHERE INFILTRATION SURFACES MAY BE COMPROMISED BY COMPACTION, FOR STANDARD DESIGN LOAD CONDITIONS, A FLAT SURFACE MAY BE ACHIEVED BY RAKING OR DRAGGING WITHOUT COMPACTION EQUIPMENT. FOR SPECIAL LOAD DESIGNS, CONTACT STORMTECH FOR COMPACTION REQUIREMENTS.

NOTES:

1. SC-740 CHAMBERS SHALL CONFORM TO THE REQUIREMENTS OF ASTM F2418 "STANDARD SPECIFICATION FOR POLYPROPYLENE (PP) CORRUGATED WALL STORMWATER COLLECTION CHAMBERS", OR ASTM F2922 "STANDARD SPECIFICATION FOR POLYETHYLENE (PE) CORRUGATED WALL STORMWATER COLLECTION CHAMBERS".
2. SC-740 CHAMBERS SHALL BE DESIGNED IN ACCORDANCE WITH ASTM F2787 "STANDARD PRACTICE FOR STRUCTURAL DESIGN OF THERMOPLASTIC CORRUGATED WALL STORMWATER COLLECTION CHAMBERS".
3. "ACCEPTABLE FILL MATERIALS" TABLE ABOVE PROVIDES MATERIAL LOCATIONS, DESCRIPTIONS, GRADATIONS, AND COMPACTION REQUIREMENTS FOR FOUNDATION, EMBEDMENT, AND FILL MATERIALS.
4. THE SITE DESIGN ENGINEER IS RESPONSIBLE FOR ASSESSING THE BEARING RESISTANCE (ALLOWABLE BEARING CAPACITY) OF THE SUBGRADE SOILS AND THE DEPTH OF FOUNDATION STONE WITH CONSIDERATION FOR THE RANGE OF EXPECTED SOIL MOISTURE CONDITIONS.
5. PERIMETER STONE MUST BE EXTENDED HORIZONTALLY TO THE EXCAVATION WALL FOR BOTH VERTICAL AND SLOPED EXCAVATION WALLS.
6. ONCE LAYER 'C' IS PLACED, ANY SOIL/MATERIAL CAN BE PLACED IN LAYER 'D' UP TO THE FINISHED GRADE. MOST PAVEMENT SUBBASE SOILS CAN BE USED TO REPLACE THE MATERIAL REQUIREMENTS OF LAYER 'C' OR 'D' AT THE SITE DESIGN ENGINEER'S DISCRETION.

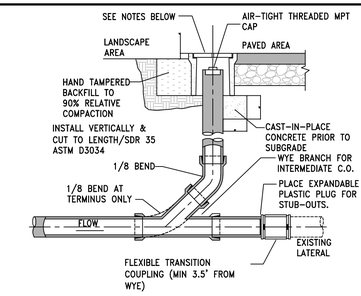

NOTES:

1. RECTANGULAR OR CIRCULAR BOXES ARE PERMITTED.
2. CONCRETE/FIBERLYTE LIDS ARE ACCEPTABLE IN NON-VEHICULAR AREAS. H-20 CAST IRON TRAFFIC LIDS AND BOXES IN VEHICULAR AREAS.
3. ALL CLEANOUT LIDS SHALL BE MARKED WITH AN "S" OR THE WORD "SEWER" FOR SANITARY SEWER CLEANOUTS
4. CLEANOUT PIPE SHALL BE THE SAME DIAMETER AS THE CONNECTED SITE PIPE.
5. TERMINATE C.O. AT CLOSEST JOINT TO SURFACE WITH TEMPORARY PLUG. AFTER ALL BACKFILL IS COMPLETE AND SUB-GRADE MADE IN AREAS TO BE PAVED, THE FINAL RISER PIPE AND BOX SHALL BE INSTALLED AS SHOWN.

CLEANOUT TO GRADE

NTS

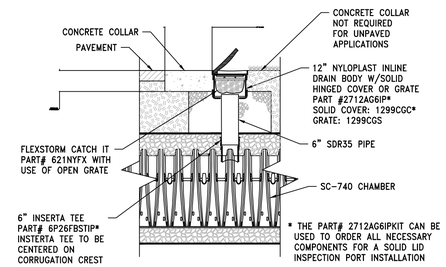

SC-740 6" INSPECTION PORT DETAIL

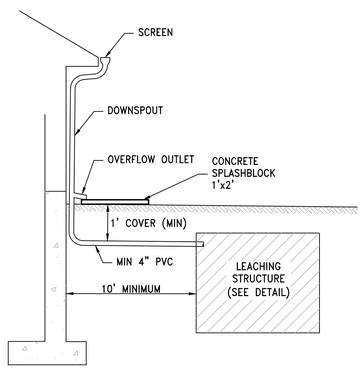

TYPICAL DOWNSPOUT DETAIL

N.T.S.

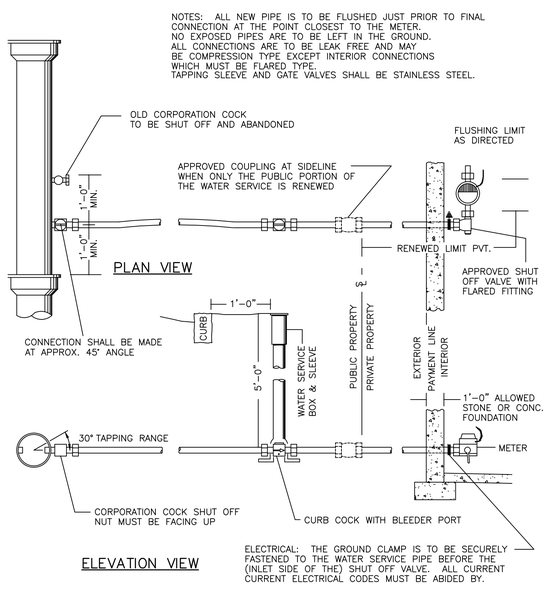

TYPICAL WATER SERVICE CONFIGURATIONS

SCALE: NOT TO SCALE

TRENCH WIDTH WS OR WU		
DIAM. OF PIPE	WU UNSHEETED	WS SHEETED
12" AND SMALLER	3'-0"	4'-2"
15" AND LARGER	O.D.+20"	O.D.+36"

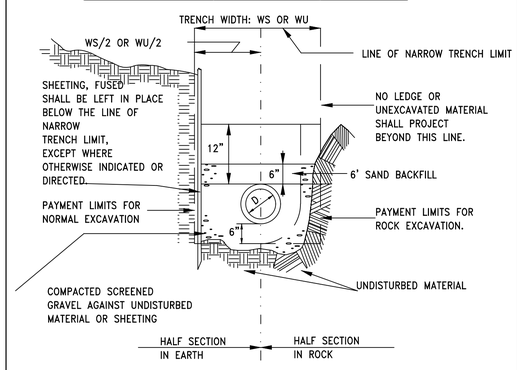

WATER TRENCH SECTION

NOT TO SCALE

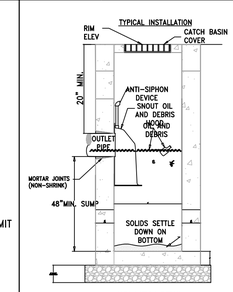

INSTALLATION DETAIL

NOTES:

1. ALL HOODS SHALL BE CONSTRUCTED OF A GLASS REINFORCED RESIN COMPOSITE WITH ISO GEL COAT EXTERIOR FINISH WITH A MINIMUM 0.125" LAMINATE THICKNESS.
2. ALL HOODS SHALL BE EQUIPED WITH A WATERTIGHT ACCESS PORT. A MOUNTING FLANGE, AND AN ANTI-SIPHON VENT AS DRAWN. (SEE CONFIGURATION DETAIL)
3. THE SIZE AND POSITION OF THE HOOD SHALL BE DETERMINED BY OUTLET PIPE SIZE AS PER MANFACTURER'S RECOMMENDATION.
4. THE BOTTOM OF THE HOOD SHALL EXTEND DOWNWARD A DISTANCE EQUAL TO ½ THE OUTLET PIPE DIAMETER WITH A MINIMUM DISTANCE OF 6" FOR PIPES <12" I.D.
5. THE ANTI-SIPHON VENT SHALL EXTEND ABOVE HOOD BY MINIMUM OF 3" AND A MAXIMUM OF 24" ACCORDING TO STRUCTURE CONFIGURATION.
6. THE SURFACE OF THE STRUCTURE WHERE THE HOOD IS MOUNTED SHALL BE FINISHED SMOOTH AND FREE OF LOOSE MATERIAL.
7. THE HOOD SHALL BE SECURELY ATTACHED TO STRUCTURE WALL WITH 3/8" STAINLESS STEEL BOLTS AND OIL-RESISTANT GASKET AS SUPPLIED BY MANUFACTURER (SEE INSTALLATION DETAIL)
8. INSTALLATION INSTRUCTIONS SHALL BE FURNISHED WITH MANUFACTURER SUPPLIED INSTALLATION KIT. INSTALLATION SHALL INCLUDE:
   A. INSTALLATION INSTRUCTIONS
   B. PVC ANTI-SIPHON VENT PIPE AND ADAPTER
   C. OIL-RESISTANT CRUSHED CELL FOAM GASKET WITH PSA BACKING
   D. 3/8" STAINLESS STEEL BOLTS
   E. ANCHOR SHIELDS

US PATENT # 6126817

CONFIGURATION DETAIL

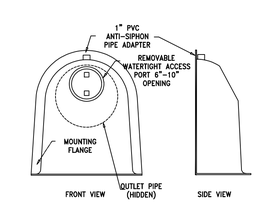

SNOUT OIL-WATER-DEBRIS SEPARATOR

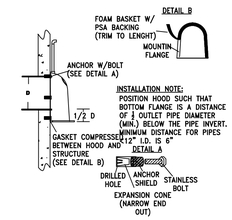

OIL-DEBRIS HOOD SPECIFICATION AND INSTALLATION (TYPICAL)

DEEP SUMP CATCH BASIN WITH DEBRIS COLLECTOR DETAIL

N.T.S.

PETER NOLAN & ASSOCIATES, LLC
LAND SURVEYORS/CIVIL ENGINEERING CONSULTANTS
80 JEWETT ST, (SUITE 2)
NEWTON, MA 02458
Tel:857-891-7478
617-782-1533
Fax:617-2025691

SPRUHAN ENGINEERING, P.C.
80 JEWETT ST, (SUITE 2)
NEWTON, MA 02458
Tel: 617-816-0722
Email:edmond@spruhaneng.com

COMMONWEALTH OF MASSACHUSETTS EDMOND SPRUHAN CIVIL No. 43316 REGISTERED PROFESSIONAL ENGINEER

148 MYRTLE ST, MELROSE, MASSACHUSETTS.

CIVIL PLAN

REVISION BLOCK

BY	DESCRIPTION	DATE
GP	REVISED AS PER DPW COMMENTS	3/23/2022

DATE:	11/18/2021
DRAWN BY:	G.P
CHECKED BY:	E.S
APPROVED BY:	P.N

DETAILS

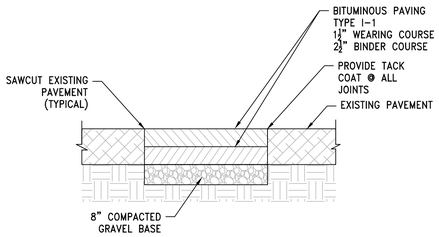

PAVEMENT MATCH SAWCUT DETAIL
N.T.S.

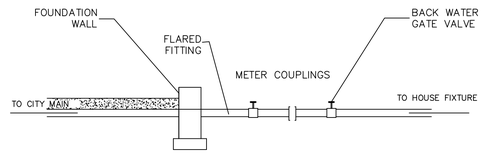

WATER METER DETAIL
SCALE: NOT TO SCALE

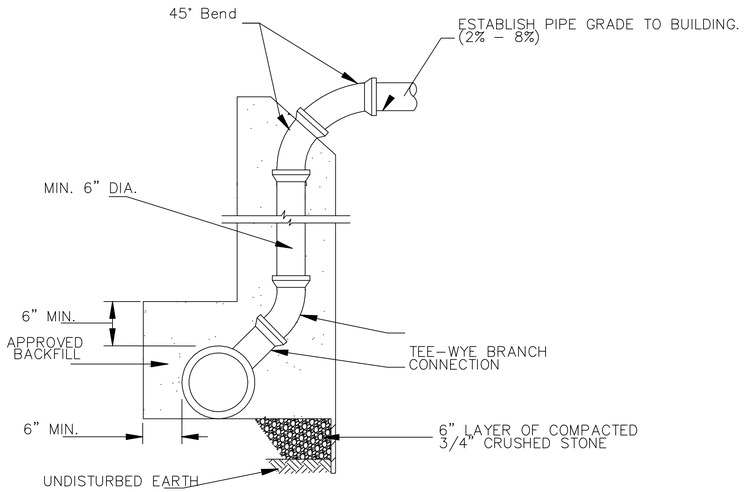

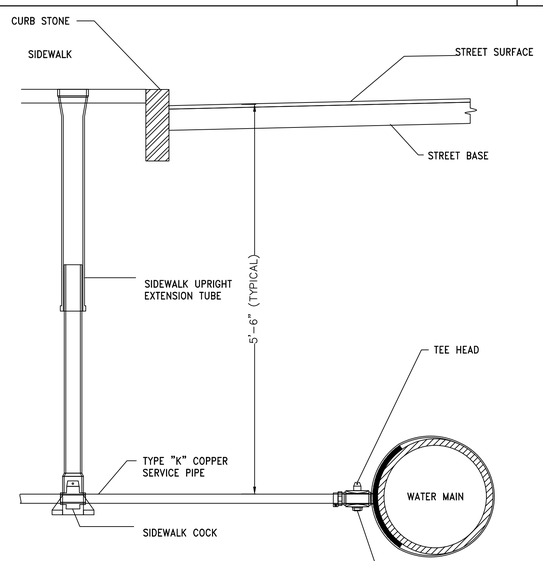

NEW WATER CONNECTION DETAIL
SCALE: NOT TO SCALE

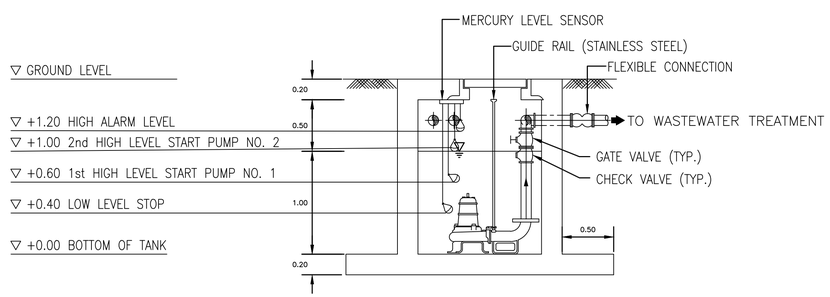

TYPICAL SUMP PUMP DETAIL

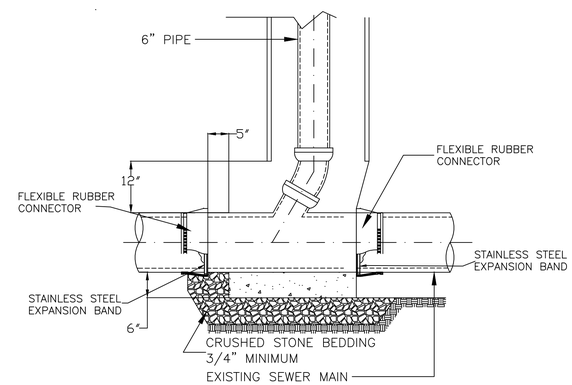

TYPICAL SEWER CHIMNEY
Scale: Not To Scale

DEEP OBSERVATION HOLE LOG:

GENERAL SOIL CONDITIONS FOR THE AREA PERFORMED AT 148 MYRTLE ST, MELROSE, MA. BY SPRUHAN ENGINEERING, P.C.

DATED: 4/9/2021

HOLE NUMBER: TH #1

GENERAL SITE CONDITIONS: BUILDINGS, PAVED/GRAVEL AREAS.

ESTIMATED SEASONAL HIGH GROUNDWATER TABLE AT 57.8' ±.

*** IMPORTANT NOTE: STRUCTURAL ENGINEER/ARCHITECT TO DESIGN WATER PROOFED BASEMENT TO AN ELEVATION OF 2 FT. MINIMUM ABOVE ESHGW.**

HOLE LOG #1

DEPTH	ELEVATION	HORIZON	TEXTURE	COLOR	MOTTLING	OTHER
0" – 12"	63.8'± – 62.8'±	AP	LOAMY SND	5 YR 3/3	–	–
12" – 24"	62.8'± – 61.8'±	BW	LOAMY SND	5 YR 4/3	–	–
24" – 60"	61.8'± – 58.8'±	C1	COARSE SND	10 YR 7/1	–	–
60" – 84"	58.8'± – 56.8'±	C2	FINE SND	10 YR 3/3	@57.8	–

HOLE LOG #2

DEPTH	ELEVATION	HORIZON	TEXTURE	COLOR	MOTTLING	OTHER
0" – 12"	64.0'± – 63.0'±	AP	LOAMY SND	5 YR 3/3	–	–
12" – 24"	63.0'± – 62.0'±	BW	LOAMY SND	5 YR 4/3	–	–
24" – 60"	62.0'± – 59.0'±	C1	COARSE SND	10 YR 7/1	–	–
60" – 84"	59.0'± – 57.0'±	C2	FINE SND	10 YR 3/3	@58.0	–

PETER NOLAN & ASSOCIATES, LLC
LAND SURVEYORS/CIVIL ENGINEERING CONSULTANTS
80 JEWETT ST, (SUITE 2)
NEWTON, MA 02458
Tel:857-891-7478
617-782-1533
Fax:617-2025691

SPRUHAN ENGINEERING, P.C.
80 JEWETT ST, (SUITE 2)
NEWTON, MA 02458
Tel: 617-816-0722
Email:edmond@spruhaneng.com

COMMONWEALTH OF MASSACHUSETTS
EDMOND SPRUHAN
No. 45316
CIVIL
REGISTERED PROFESSIONAL ENGINEER

148 MYRTLE ST, MELROSE, MASSACHUSETTS.

CIVIL PLAN

REVISION BLOCK

BY	DESCRIPTION	DATE
GP	REVISED AS PER DPW COMMENTS	3/23/2022

DATE:	11/18/2021
DRAWN BY:	G.P
CHECKED BY:	E.S
APPROVED BY:	P.N

DETAILS

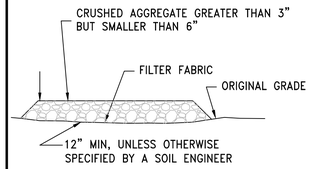

SECTION B–B

NTS

NOTES:

1. THE ENTRANCE SHALL BE MAINTAINED IN A CONDITION THAT WILL PREVENT TRACKING OR FLOWING OF SEDIMENT ONTO PUBLIC RIGHT–OF–WAYS. THIS MAY REQUIRE TOP DRESSING, REPAIR AND/OR CLEANOUT OF ANY MEASURES USED TO TRAP SEDIMENT.
2. WHEN NECESSARY, WHEELS SHALL BE CLEANED PRIOR TO ENTRANCE ONTO PUBLIC RIGHT–OF–WAY.
3. WHEN WASHING IS REQUIRED, IT SHALL BE DONE ON AN AREA STABILIZED WITH CRUSHED STONE THAT DRAINS INTO AN APPROVED SEDIMENT TRAP OR SEDIMENT BASIN.

RUMBLE STRIPS MAY BE USED AS AN ALTERNATIVE SUBJECT TO THE APPROVAL OF THE CITY PRIOR TO INSTALLATION

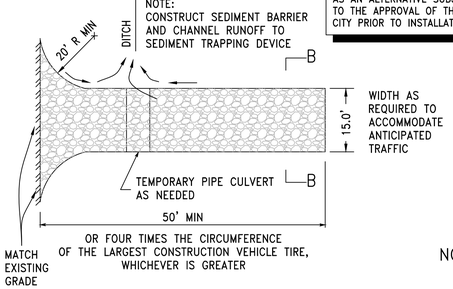

CONSTRUCTION SPECIFICATIONS:

1. THE AGGREGATE SIZE FOR CONSTRUCTION OF THE PAD SHALL BE 2–3 INCH (50–75 MM) STONE. PLACE THE GRAVEL TO THE SPECIFIC GRADE AND DIMENSIONS SHOWN ON THE PLANS, AND SMOOTH IT.
2. THE THICKNESS OF THE PAD SHALL NOT BE LESS THAN 6 INCHES (152 MM). USE GEOTEXTILE FABRICS, IF NECESSARY, TO IMPROVE STABILITY OF THE FOUNDATION IN LOCATIONS SUBJECT TO SEEPAGE OR HIGH WATER TABLE.
3. THE WIDTH OF THE PAD SHALL NOT BE LESS THAN THE FULL WIDTH OF ALL POINTS OF INGRESS OR EGRESS AND IN ANY CASE SHALL NOT BE LESS THAN 12 FEET (3.6 M) WIDE.
4. THE LENGTH OF THE PAD SHALL BE AS REQUIRED, BUT NOT LESS THAN 50 FEET (15.2 M).
5. LOCATE CONSTRUCTION ENTRANCES AND EXITS TO LIMIT SEDIMENT LEAVING THE SITE AND TO PROVIDE FOR MAXIMUM UTILITY BY ALL CONSTRUCTION VEHICLES. AVOID ENTRANCES WHICH HAVE STEEP GRADES AND ENTRANCES AT CURVES IN PUBLIC ROADS.
6. THE ENTRANCE SHALL BE MAINTAINED IN A CONDITION THAT WILL PREVENT TRACKING OR FLOWING OF SEDIMENT ONTO PUBLIC RIGHTS–OF–WAY. THIS MAY REQUIRE PERIODIC TOP DRESSING WITH ADDITIONAL STONE AS CONDITIONS DEMAND, AND REPAIR AND/OR MAINTENANCE OF ANY MEASURES USED TO TRAP SEDIMENT.
7. ALL SEDIMENT SPILLED, DROPPED, WASHED OR TRACKED ONTO PUBLIC RIGHTS–OF–WAY SHALL BE REMOVED IMMEDIATELY.
8. PROVIDE DRAINAGE TO CARRY WATER TO A SEDIMENT TRAP OR OTHER SUITABLE OUTLET.
9. WHEN NECESSARY, WHEELS SHALL BE CLEANED TO REMOVE SEDIMENT PRIOR TO ENTRANCE ONTO PUBLIC RIGHTS–OF–WAY. WHEN WASHING IS REQUIRED, IT SHALL BE DONE ON AN AREA STABILIZED WITH CRUSHED STONE THAT DRAINS INTO AN APPROVED SEDIMENT TRAP OR SEDIMENT BASIN. SEE SEDIMENT BASIN BMP.
10. ALL SEDIMENT SHALL BE PREVENTED FROM ENTERING ANY STORM DRAIN, DITCH OR WATERCOURSE THROUGH USE OF SAND BAGS, GRAVEL, STRAW BALES, OR OTHER APPROVED METHODS.

INSPECTION AND MAINTENANCE:

11. MAINTAIN THE GRAVEL PAD IN A CONDITION TO PREVENT MUD OR SEDIMENT FROM LEAVING THE CONSTRUCTION SITE.
12. REPLACE GRAVEL MATERIAL WHEN SURFACE VOIDS ARE NOT VISIBLE.
13. AFTER EACH RAINFALL, INSPECT ANY STRUCTURE USED TO TRAP SEDIMENT AND CLEAN IT OUT AS NECESSARY.
14. IMMEDIATELY REMOVE ALL OBJECTIONABLE MATERIALS SPILLED, WASHED, OR TRACKED ONTO PUBLIC ROADWAYS. REMOVE ALL SEDIMENT DEPOSITED ON PAVED ROADWAYS WITHIN 24 HOURS.

NOTE: DIMENSIONS ± SUBJECT TO SITE PARAMETERS & CONDITIONS

STABILIZED CONSTRUCTION ENTRANCE DETAIL

N.T.S.

SHEA CONCRETE PRODUCTS

New England's Premier Precaster
800–696–7432 (SHEA)
www.sheaconcrete.com

BILLING ADDRESS: 87 HAVERHILL RD, AMESBURY MA 01913

UNISTORM ONLINE SYSTEM

UNISTORM SIZING TABLE

UNISTORM MODEL #	D (ft.)	MAX. S (ft.)	IMPERVIOUS AREA (acres)	INLET PIPE (in.)	TREATMENT FLOW (cfs)	PEAK FLOW (cfs)
5R	5	5.0±	0 - 3	12-15	0 - 2	6
6R	6	5.3±	3 - 4	18	2 - 3	7
7R	7	5.6±	4 - 6	21	3 - 5	9
8R	8	6.0±	6 - 10	24	5 - 7	16
10R	10	6.6±	10 - 12	30	7 - 10	25
12R	12	7.3±	12 - 15	36	10 - 13	35

GENERAL NOTES:
MANHOLE DESIGN SPECIFICATIONS CONFORM TO LATEST ASTM C478 SPEC. FOR PRECAST REINFORCED CONCRETE MANHOLE SECTIONS.

DESIGN LOADING: AASHTO HS–20

NOTES:
1) RAINFALL INTENSITY USED FOR TREATMENT FLOW = 0.80–1.0 IN/HR

MANUFACTURING NOTES:
1) DESIGN OF INTERNAL BAFFLE WALL PROVIDED TO LICENSED MANUFACTURER BY ENVIRONMENT 21, LLC.
2) LOCATION AND SIZE OF MANHOLE OPENINGS MAY BE ADJUSTED BY LICENSED MANUFACTURER.
3) G.C. TO GROUT INLET AND OUTLET PIPES.

GENERAL DESIGN GUIDELINES FOR UNISTORM TREATMENT CHAMBER
1) FLOW DISTRIBUTOR USED TO DISSIPATE INLET FLOW STIRRING POWER. THIS ELIMINATES THE NEED TO BYPASS HIGH FLOW EVENTS.
2) TYPICAL INTERNAL HEAD LOSS FOR DESIGN STORM IS 0.20 FT.
3) DESIGN OF FLOW CONTROL BAFFLE WALL AND FLOW DISTRIBUTOR BASED ON ENVIRONMENT 21 ANALYSIS OF SITE-SPECIFIC STORM SEWER HYDRAULICS.
4) SITE-SPECIFIC AUTOCAD DRAWING DETAIL PREPARED BY ENVIRONMENT 21 AVAILABLE

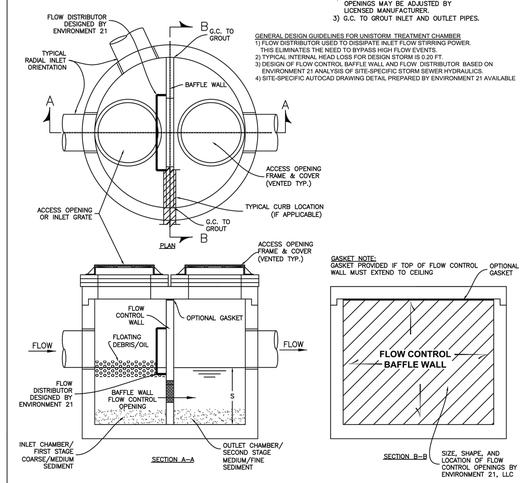

SHEA PRODUCT ID: UNISTORM	PREPARED FOR:		FILE NAME: ENV21Unistorm.dwg	
WEIGHT (LBS):	DRAWN BY: ARO	DATE: 06/01/18	PAGE: H5.1	

773 Salem Street–Wilmington, MA | 153 Cranberry Hwy–Rochester, MA | 87 Haverhill Road–Amesbury, MA | 160 Old Turnpike Rd–Nottingham, NH

Specifications subject to change without notice

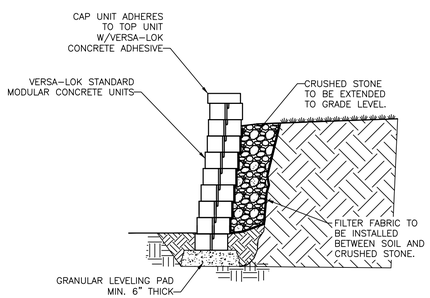

TYPICAL SECTION–UNREINFORCED RETAINING WALL

SCALE: NONE

THESE PRELIMINARY DETAILS ARE INTENDED AS AN AID IN DESIGNING ATTRACTIVE, DURABLE RETAINING WALLS WITH VERSA–LOK UNITS. FINAL DETERMINATION OF THE SUITABILITY OF ANY INFORMATION OR MATERIAL FOR THE USE CONTEMPLATED, AND ITS MANNER OF USE, IS THE SOLE RESPONSIBILITY OF THE USER. A FINAL PROJECT SPECIFIC DESIGN SHOULD BE PREPARED BY A QUALIFIED, LICENSED, PROFESSIONAL ENGINEER.

VERSA–LOK® Retaining Wall Systems
(800)770–4525 fax(651)770–4088
6348 Hwy36 Stwt, Oakdale,MN 55128 Solid Solutions.™

VERSA–LOK STANDARD DETAILS	SCALE: 1/2"=1'
	DRAWN BY: PPS
	REVIEWED BY:
UNREINFORCED SECTION	DATE: 10/2007
	DWG. NO: dtail unreinforced section

PETER NOLAN & ASSOCIATES, LLC
LAND SURVEYORS/CIVIL ENGINEERING CONSULTANTS
80 JEWETT ST, (SUITE 2)
NEWTON, MA 02458
Tel:857-891-7478
617-782-1533
Fax:617-2025691

SPRUHAN ENGINEERING, P.C.
80 JEWETT ST, (SUITE 2)
NEWTON, MA 02458
Tel: 617-816-0722
Email:edmond@spruhaneng.com

COMMONWEALTH OF MASSACHUSETTS
EDMOND SPRUHAN
CIVIL
No. 45316
REGISTERED PROFESSIONAL ENGINEER

148 MYRTLE ST,
MELROSE,
MASSACHUSETTS.

CIVIL PLAN

REVISION BLOCK

BY	DESCRIPTION	DATE
GP	REVISED AS PER DPW COMMENTS	3/23/2022

DATE:	11/18/2021
DRAWN BY:	G.P
CHECKED BY:	E.S
APPROVED BY:	P.N

DETAILS

SHEET 4 OF 5

EROSION CONTROL NOTES

1. THE EROSION CONTROL PLANS IN THIS SET SHALL BE REVIEWED AND IMPLEMENTED BY THE CONTRACTOR PRIOR TO COMMENCEMENT OF WORK. CONTRACTOR SHALL WORK WITH THE PROJECT'S ENGINEER THROUGHOUT CONSTRUCTION TO ENSURE THE SITE IS PROPERLY PROTECTED FROM POSSIBLE POLLUTANTS. THE ENGINEER HAS AUTHORIZATION TO ADD OR REMOVE BMP MEASURES THROUGHOUT CONSTRUCTION.
2. THE CONTRACTOR SHALL BE RESPONSIBLE FOR IMPLEMENTING AND MAINTAINING SITE EROSION CONTROL AT ALL TIMES.
3. IT SHALL BE THE RESPONSIBILITY OF THE OWNER AND THE PERMITTEE TO ENSURE THAT EROSION DOES NOT OCCUR FROM ANY ACTIVITY DURING OR AFTER PROJECT CONSTRUCTION. ADDITIONAL MEASURES, BEYOND THOSE SPECIFIED, MAY BE REQUIRED BY THE PLANNING DIRECTOR AS DEEMED NECESSARY TO CONTROL ACCELERATED EROSION.
4. AT THE END OF EACH WORKDAY, AT THE END OF EACH WORKWEEK, THE CONTRACTOR SHALL IMPLEMENT ALL TEMPORARY MEASURES NECESSARY TO PREVENT EROSION AND SILTATION, UNTIL THE PROJECT HAS BEEN FINALIZED. THESE MEASURES SHALL INCLUDE, BUT NOT BE LIMITED TO, DIRECT SEEDING OF THE AFFECTED AREAS, STRAW MULCHING, AND/OR INSTALLATION OF STRAW BALES DAMS/SILT FENCES.
5. DURING CONSTRUCTION, NO TURBID WATER SHALL BE PERMITTED TO LEAVE THE SITE. USE OF SILT AND GREASE TRAPS, FILTER BERMS, HAY BALES OR SILT FENCES SHALL BE USED TO PREVENT SUCH DISCHARGE.
6. ALL AREAS ON- AND OFF-SITE EXPOSED DURING CONSTRUCTION ACTIVITIES, IF NOT PERMANENTLY LANDSCAPED PER PLAN, SHALL BE PROTECTED BY MULCHING AND/OR SEEDING.
7. ALL EXCAVATED MATERIAL SHALL BE REMOVED TO AN APPROVED DISPOSAL SITE OR DISPOSED OF ON-SITE IN A MANNER THAT WILL NOT CAUSE EROSION.
8. ANY MATERIAL STOCKPILED, FOR LONGER THAN 14 DAYS, DURING CONSTRUCTION SHALL BE COVERED WITH PLASTIC.
9. UPON COMPLETION OF CONSTRUCTION, ALL REMAINING EXPOSED SOILS SHALL BE PERMANENTLY REVEGETATED.
10. IT IS THE CONTRACTOR'S RESPONSIBILITY TO SEE THAT ADDITIONAL MEASURES NECESSARY TO CONTROL SITE EROSION AND PREVENT SEDIMENT TRANSPORT OFF-SITE ARE IMPLEMENTED.
11. ALL SPILLS AND/OR LEAKS SHALL BE IMMEDIATELY CLEANED UP AND MITIGATED.

CONSTRUCTION MATERIALS

- ALL LOOSE STOCKPILED CONSTRUCTION MATERIALS THAT ARE NOT ACTIVELY BEING USED (I.E. SOIL, SPOILS, AGGREGATE, FLY-ASH, STUCCO, HYDRATED LIME, ETC.) SHALL BE COVERED AND BERMED.
- ALL CHEMICALS SHALL BE STORED IN WATERTIGHT CONTAINERS (WITH APPROPRIATE SECONDARY CONTAINMENT TO PREVENT ANY SPILLAGE OR LEAKAGE) OR IN A STORAGE SHED (COMPLETELY ENCLOSED).
- EXPOSURE OF CONSTRUCTION MATERIALS TO PRECIPITATION SHALL BE MINIMIZED. THIS DOES NOT INCLUDE MATERIALS AND EQUIPMENT THAT ARE DESIGNED TO BE OUTDOORS AND EXPOSED TO ENVIRONMENTAL CONDITIONS (I.E. POLES, EQUIPMENT PADS, CABINETS, CONDUCTORS, INSULATORS, BRICKS, ETC.).
- BEST MANAGEMENT PRACTICES TO PREVENT THE OFF-SITE TRACKING OF LOOSE CONSTRUCTION AND LANDSCAPE MATERIALS SHALL BE IMPLEMENTED.

WASTE MANAGEMENT

- DISPOSAL OF ANY RINSE OR WASH WATERS OR MATERIALS ON IMPERVIOUS OR PERVIOUS SITE SURFACES OR INTO THE STORM DRAIN SYSTEM SHALL BE PREVENTED.
- SANITATION FACILITIES SHALL BE CONTAINED (E.G. PORTABLE TOILETS) TO PREVENT DISCHARGES OF POLLUTANTS TO THE STORM WATER DRAINAGE SYSTEM OR RECEIVING WATER, AND SHALL BE LOCATED A MINIMUM 20 FEET AWAY FROM AN INLET, STREET OR DRIVEWAY, STREAM, RIPARIAN AREA OR OTHER DRAINAGE FACILITY.
- SANITATION FACILITIES SHALL BE INSPECTED REGULARLY FOR LEAKS AND SPILLS AND CLEANED OR REPLACED AS NECESSARY.
- COVER WASTE DISPOSAL CONTAINERS AT THE END OF EVERY BUSINESS DAY AND DURING A RAIN EVENT.
- DISCHARGES FROM WASTE DISPOSAL CONTAINERS TO THE STORM WATER DRAINAGE SYSTEM OR RECEIVING WATER SHALL BE PREVENTED.
- STOCKPILED WASTE MATERIAL SHALL BE CONTAINED AND SECURELY PROTECTED FROM WIND AND RAIN AT ALL TIMES UNLESS ACTIVELY BEING USED.

  PROCEDURES THAT EFFECTIVELY ADDRESS HAZARDOUS AND NON-HAZARDOUS SPILLS SHALL BE IMPLEMENTED.EQUIPMENT AND MATERIALS FOR CLEANUP OF SPILLS SHALL BE AVAILABLE ON SITE AND THAT SPILLS AND LEAKS SHALL BE CLEANED UP IMMEDIATELY AND DISPOSED OF PROPERLY; AND
- CONCRETE WASHOUT AREAS AND OTHER WASHOUT AREAS THAT MAY CONTAIN ADDITIONAL POLLUTANTS SHALL BE CONTAINED SO THERE IS NO DISCHARGE INTO THE UNDERLYING SOIL AND ONTO THE SURROUNDING AREAS.

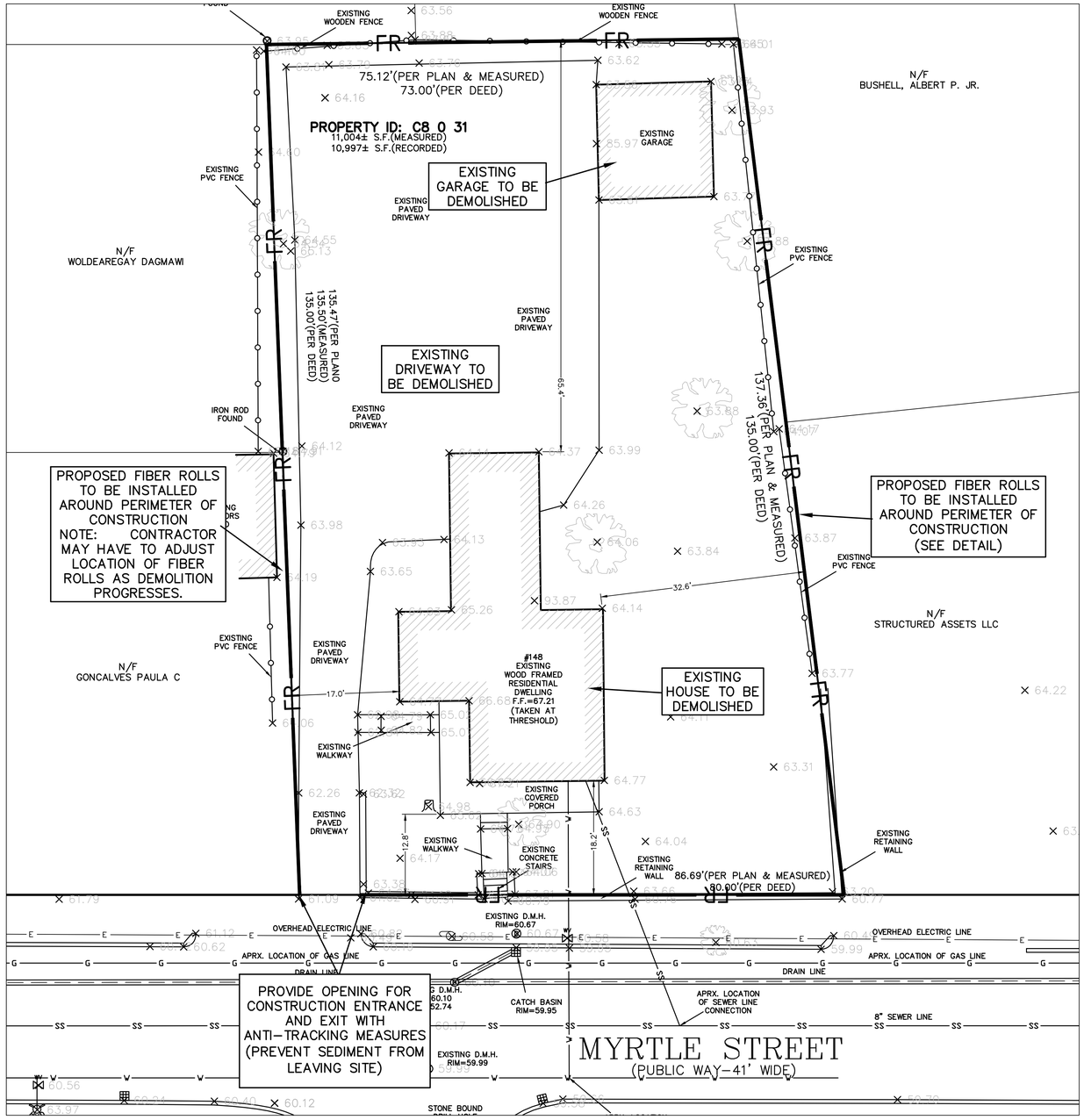

VEHICLE STORAGE AND MAINTENANCE

- MEASURES SHALL BE TAKEN TO PREVENT OIL, GREASE, OR FUEL TO LEAK IN TO THE GROUND, STORM DRAINS OR SURFACE WATERS.
- ALL EQUIPMENT OR VEHICLES, WHICH ARE TO BE FUELED, MAINTAINED AND STORED ONSITE SHALL BE IN A DESIGNATED AREA FITTED WITH APPROPRIATE BMPs.
- LEAKS SHALL BE IMMEDIATELY CLEANED AND LEAKED MATERIALS SHALL BE DISPOSED OF PROPERLY.

LANDSCAPE MATERIALS

- CONTAIN STOCKPILED MATERIALS SUCH AS MULCHES AND TOPSOIL WHEN THEY ARE NOT ACTIVELY BEING USED
- CONTAIN FERTILIZERS AND OTHER LANDSCAPE MATERIALS WHEN THEY ARE NOT ACTIVELY BEING USED.
- DISCONTINUE THE APPLICATION OF ANY ERODIBLE LANDSCAPE MATERIAL WITHIN 2 DAYS BEFORE A FORECASTED RAIN EVENT OR DURING PERIODS OF PRECIPITATION.
- APPLY ERODIBLE LANDSCAPE MATERIAL AT QUANTITIES AND APPLICATION RATES ACCORDING TO MANUFACTURE RECOMMENDATIONS OR BASED ON WRITTEN SPECIFICATIONS BY KNOWLEDGEABLE AND EXPERIENCED FIELD PERSONNEL.
- STACK ERODIBLE LANDSCAPE MATERIAL ON PALLETS AND COVERING OR STORING SUCH MATERIALS WHEN NOT BEING USED OR APPLIED.

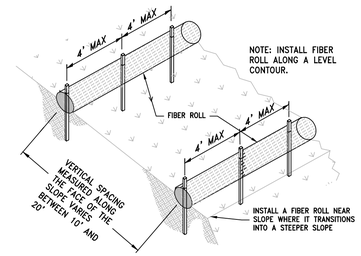

TYPICAL INSTALLATION

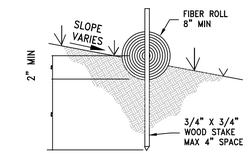

ENTRENCHMENT DETAIL

FIBER ROLLS

NTS

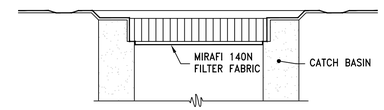

INSPECTION AND MAINTENANCE:

1. FILTER FABRIC BARRIERS SHALL BE INSPECTED WEEKLY AFTER EACH SIGNIFICANT STORM - 1 INCH RAINFALL (25.4 MM) IN 24 HOUR PERIOD. ANY REQUIRED REPAIRS SHALL BE MADE IMMEDIATELY.
2. SEDIMENT SHOULD BE REMOVED WHEN IT REACHES 0.5" MAXIMUM HEIGHT. AT THAT TIME INSPECT THE FILTER MATERIAL FOR TEARS AND CLEAN OR REPLACE AS REQUIRED.
3. THE REMOVED SEDIMENT SHALL BE DISTRIBUTED EVENLY ACROSS AREAS ON-SITE, CONFORM WITH THE EXISTING GRADE AND BE REVEGETATED OR OTHERWISE STABILIZED PER EROSION CONTROL NOTES.

CATCH BASIN PROTECTION

NTS

FIBER ROLL CONSTRUCTION SPECIFICATIONS

1. PREPARE SLOPE BEFORE THE WATTLING PROCEDURE IS STARTED. SHALLOW GULLIES SHOULD BE SMOOTHED AS WORK PROGRESSES.
2. DIG SMALL TRENCHES ACROSS SLOPE ON CONTOUR, TO PLACE WATTLES IN. THE TRENCH SHOULD BE DEEP ENOUGH TO ACCOMMODATE HALF THE THICKNESS OF THE WATTLE. WHEN THE SOIL IS LOOSE AND UNCOMPACTED, THE TRENCH SHOULD BE DEEP ENOUGH TO BURY THE WATTLE 2/3 OF ITS THICKNESS BECAUSE THE GROUND WILL SETTLE. IT IS CRITICAL THAT WATTLES ARE INSTALLED PERPENDICULAR TO WATER MOVEMENT, PARALLEL TO THE SLOPE CONTOUR.
3. START BUILDING TRENCHES AND INSTALL WATTLES FROM THE BOTTOM OF THE SLOPE AND WORK UP.
4. CONSTRUCT TRENCHES AT CONTOUR INTERVALS OF THREE TO EIGHT FEET APART DEPENDING ON STEEPNESS OF SLOPE. THE STEEPER THE SLOPE, THE CLOSER TOGETHER THE TRENCHES.
5. LAY THE WATTLE ALONG THE TRENCHES FITTING IT SNUGLY AGAINST THE SOIL. MAKE SURE NO GAPS EXIST BETWEEN THE SOIL AND THE STRAW WATTLE. USE A STRAIGHT BAR TO DRIVE HOLES THROUGH THE WATTLE AND INTO THE SOIL FOR THE WOODEN STAKES.
6. DRIVE THE STAKE THROUGH THE PREPARED HOLE INTO THE SOIL. LEAVE ONLY ONE OR TWO INCHES OF STAKE EXPOSED ABOVE WATTLE. IF USING WILLOW STAKES REFER TO USDA SOIL CONSERVATION SERVICE TECHNICAL GUIDE, BIOENGINEERING, FOR GUIDELINES TO PREPARING LIVE WILLOW MATERIAL.
7. INSTALL STAKES AT LEAST EVERY FOUR FEET APART THROUGH WATTLE. ADDITIONAL STAKES MAY BE DRIVEN ON THE DOWNSLOPE SIDE OF THE TRENCHES ON HIGHLY EROSIVE OR VERY STEEP SLOPES.

FIBER ROLL INSTALLATION AND MAINTENANCE

8. INSPECT THE STRAW WATTLE AND THE SLOPES AFTER SIGNIFICANT STORMS. MAKE SURE THE WATTLES ARE IN CONTACT WITH THE SOIL.
9. REPAIR ANY RILLS OR GULLIES PROMPTLY.
10. RESEED OR REPLANT VEGETATION IF NECESSARY UNTIL THE SLOPE IS STABILIZED.

FR — FIBER ROLLS

GRAPHIC SCALE

10 0 5 10 20 40

(IN FEET)
1 inch = 10 ft.

PETER NOLAN & ASSOCIATES, LLC
LAND SURVEYORS/CIVIL ENGINEERING CONSULTANTS
80 JEWETT ST, (SUITE 2)
NEWTON, MA 02458
Tel:857-891-7478
617-782-1533
Fax:617-2025691

SPRUHAN ENGINEERING, P.C.
80 JEWETT ST, (SUITE 2)
NEWTON, MA 02458
Tel: 617-816-0722
Email:edmond@spruhaneng.com

COMMONWEALTH OF MASSACHUSETTS
EDMOND J. SPRUHAN
CIVIL
No. 43318
REGISTERED PROFESSIONAL ENGINEER

148 MYRTLE ST,
MELROSE,
MASSACHUSETTS.

CIVIL PLAN

REVISION BLOCK

BY	DESCRIPTION	DATE
GP	REVISED AS PER DPW COMMENTS	3/23/2022

DATE:	11/18/2021
DRAWN BY:	G.P
CHECKED BY:	E.S
APPROVED BY:	P.N

EROSION CONTROL & DEMOLITION PLAN